#30115 #30120 #30310 #30315 Ford 302 & 351W Reverse Rotation Alternator Bracket Kit with Idler

Revised 7-1-06

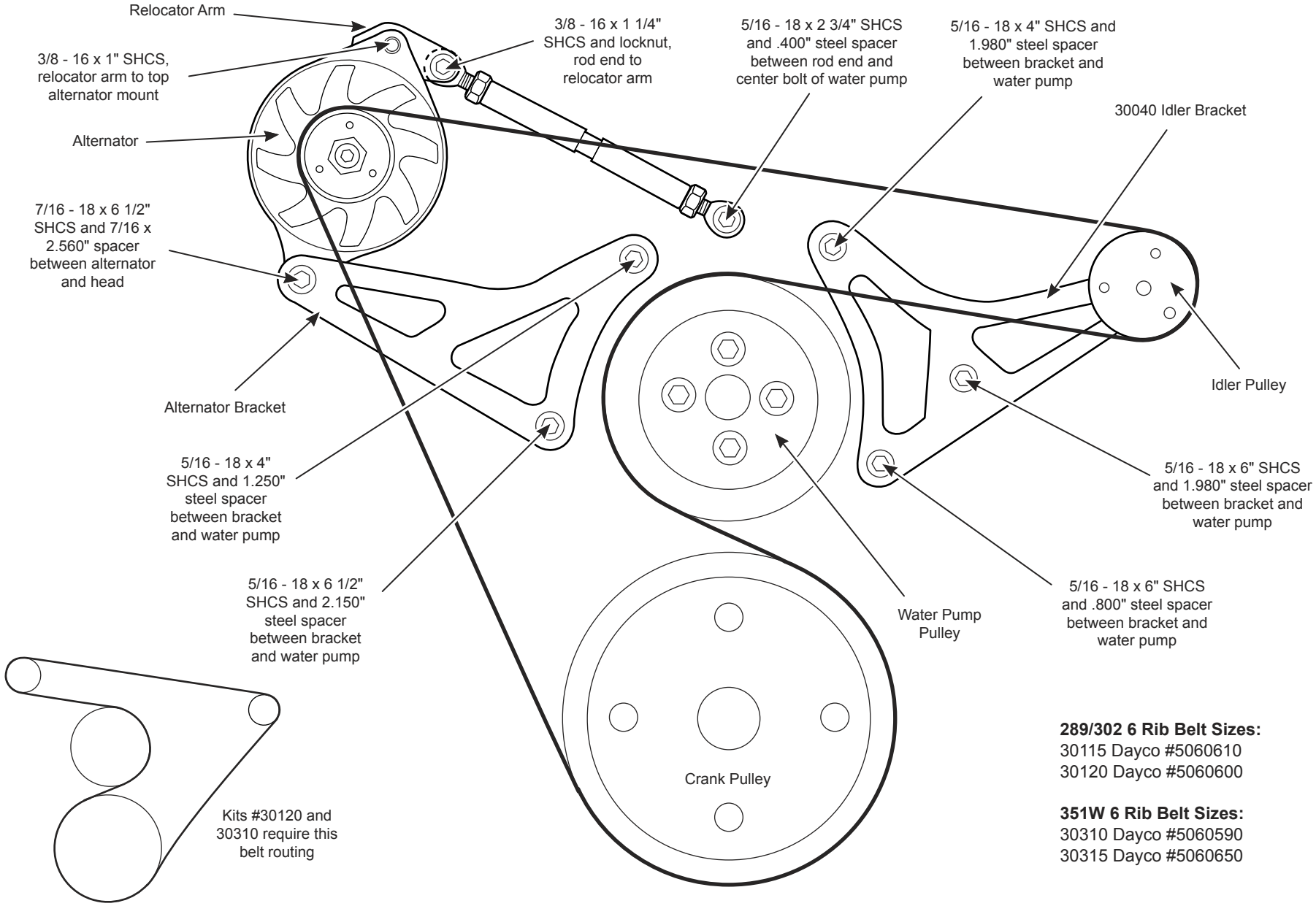

289/302 6 Rib Belt Sizes:
30115 Dayco #5060610
30120 Dayco #5060600

351W 6 Rib Belt Sizes:
30310 Dayco #5060590
30315 Dayco #5060650

MARCH PERFORMANCE, INC. • 16160 PERFORMANCE WAY • NAPLES, FLORIDA 34110

Technical Support 888-729-9070